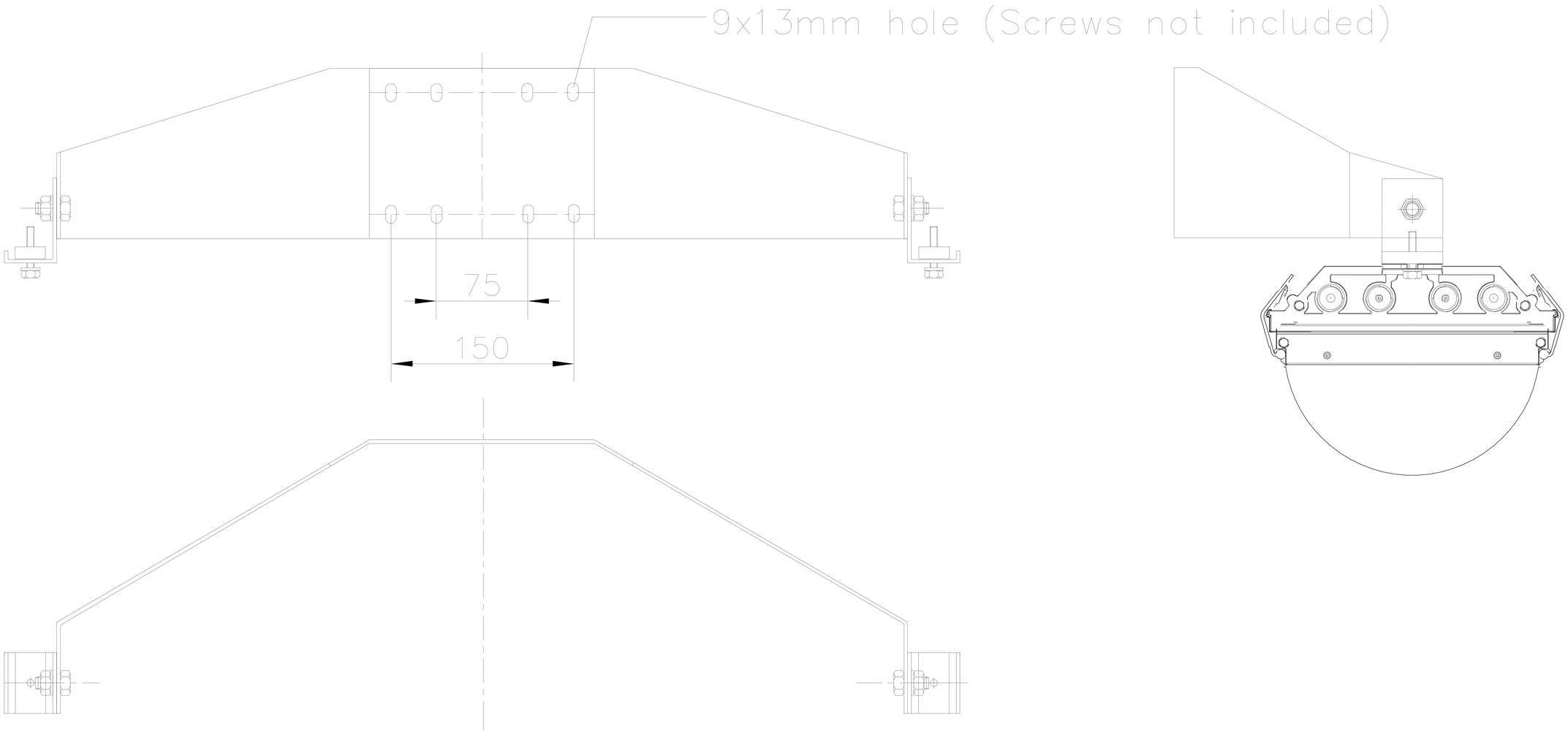

	Dimensions: 750 x 200 x 140mm	Kg/Qty	Kpl
	9001 00 00	2,5 kg	
	Wall bracket	22.02.2012	
	Mounting instructions	Tehdasvalo	